SPECIFICATION & SPECIAL FEATURES

FRC SERIES

FRC Series are powerful and highly reliable. It has very low fuel consumption comparing to those of the same class. They have the same configuration as FD and SK series. FRC engines are made by our accumulated advanced technologies optimized for your application.

		D04FRC	D06FRC
Type		4-cycle water-cooled diesel engine	
Aspiration		Turbocharged	
Number of cylinders		4	6
Bore and stroke	mm	102□130	
Displacement	cc	4249	6373
Combustion system		Direct injection	
Maximum gross output	kW/min^{-1}	74 / 2000, 91 / 2150, 98 / 2200	129 / 2100, 138 / 2100, 150 / 2100
Fuel / Fuel system		Diesel fuel (ASTM No.2-D) / Common rail system	
Charging alternator	V - A	24-50	
Starting system	V - kW	24 - 5.0	
Engine oil capacity	ℓ	17.5	29.0
Dry weight (1500/1800 rpm. spec.)	kg	420	560
Flywheel		MHI Standard	
Flywheel Housing		SAE #3	

Performance Curve

Dimensions (Unit: mm)

D04FRC

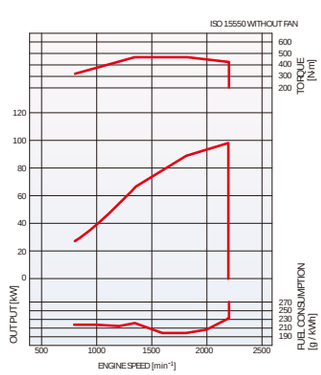

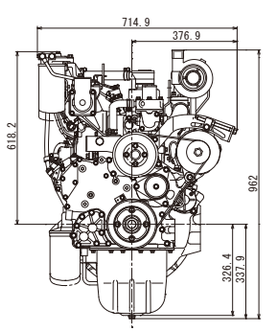

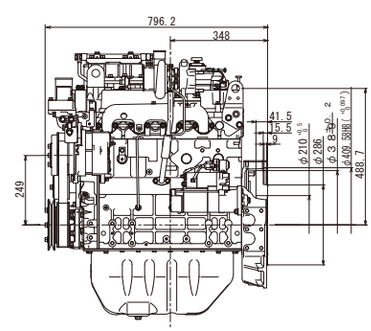

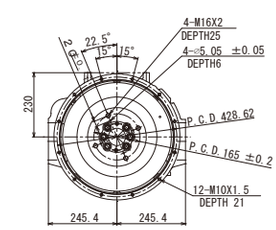
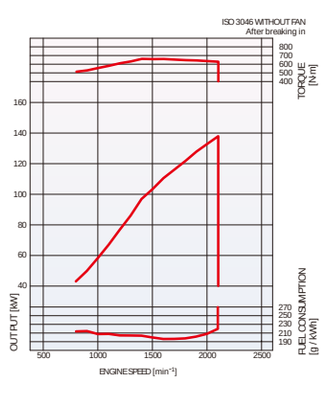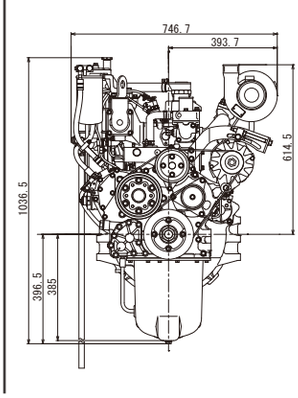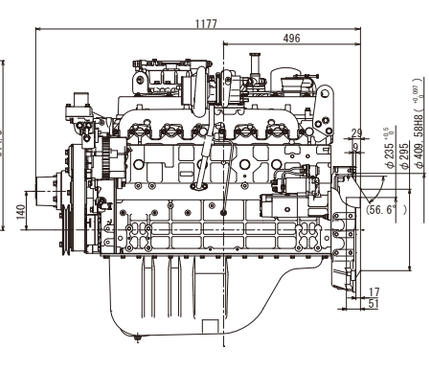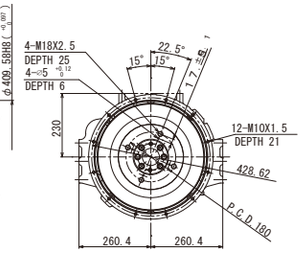
D06FRC